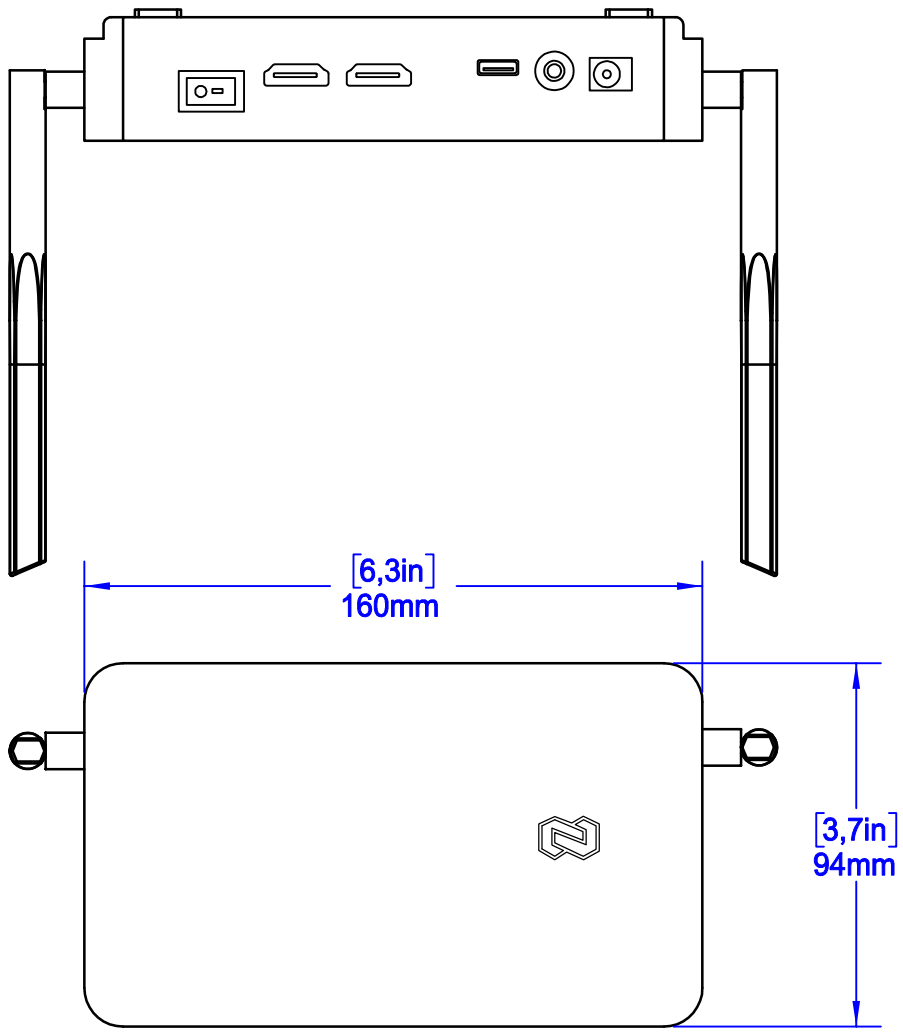

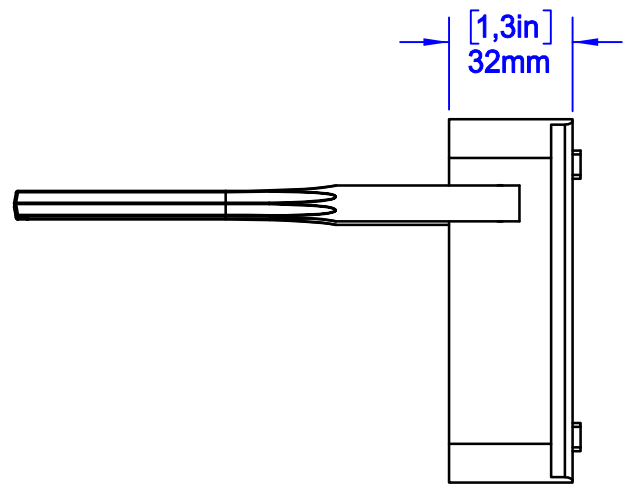

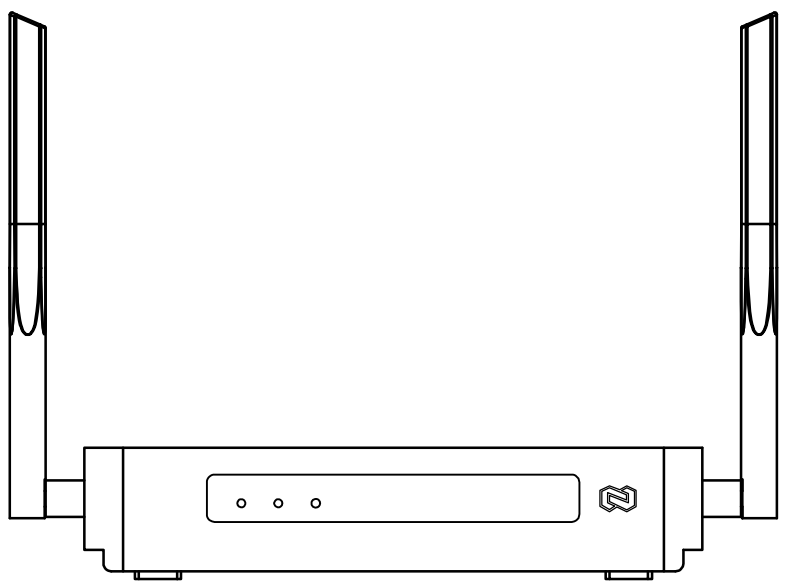

	NAME	DATE
DRAWN	P.Myrutenko	03-12-2026
CHK'D		
APPV'D	E.Makarenko	

COMPANY

BZB GEAR®

830 National Dr Ste 140, Sacramento, CA 95834, USA; Office: (888) 499-9906;
Local: +1 (916) 383-3154; Email: info@bzbgear.com

Model NO.

BG-Air4Kast-Pro-TX

A3

REV.

-R01

SCALE:1:2

SHEET 1 OF 1